PLEASE FOLLOW THOSE NUMBERS AS STATED BELOW FOR EASY ASSEMBLE.

EXAMPLE : STEP ASM. 1 HARDWARE (A) PART 12

MODEL SIZE : H670 x W765 x D300
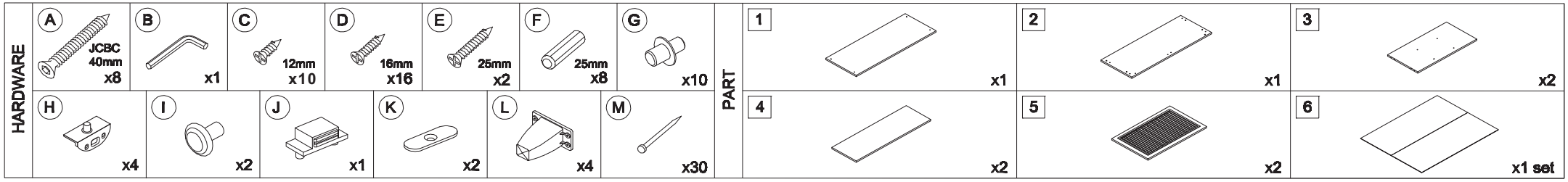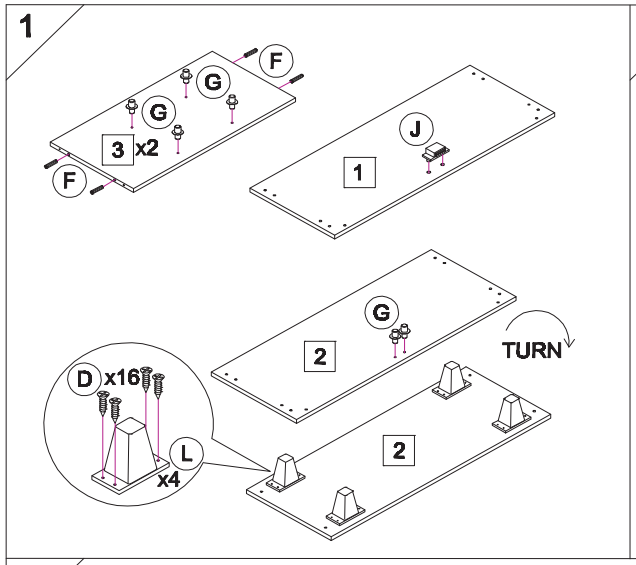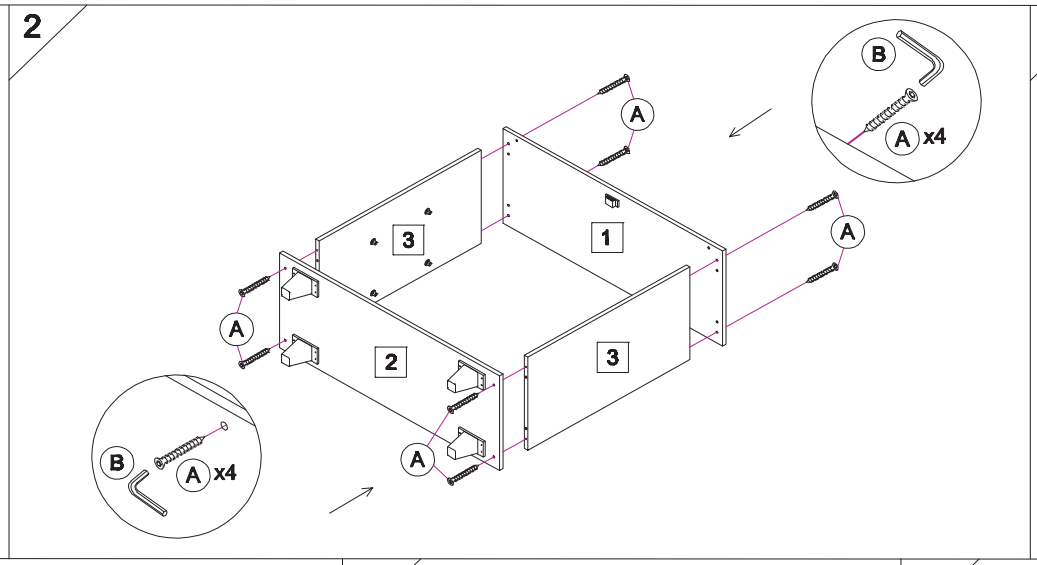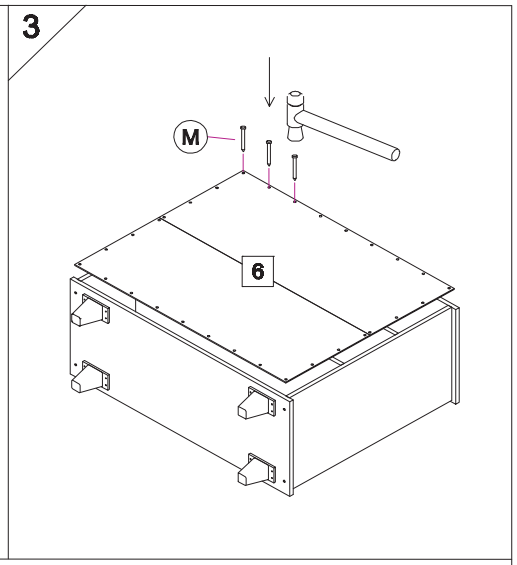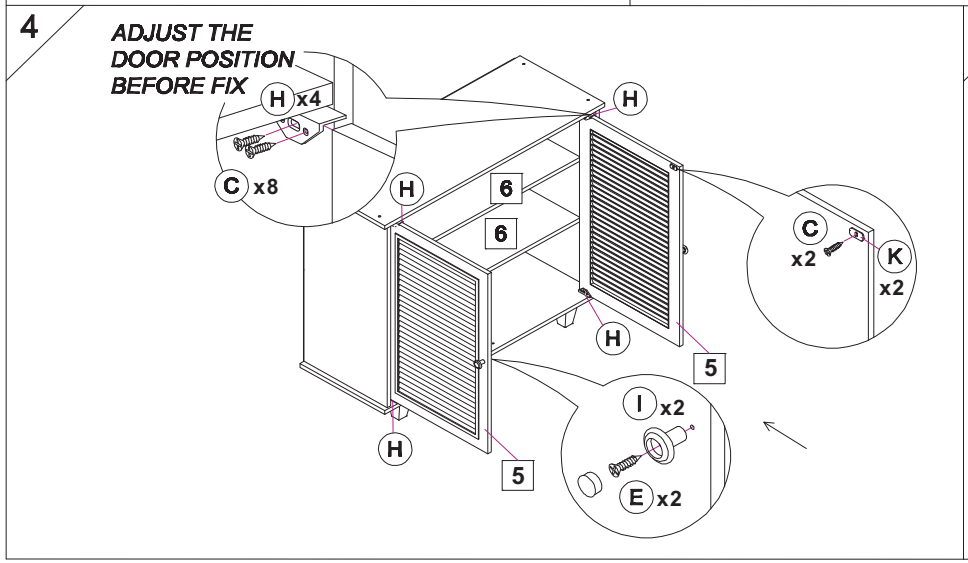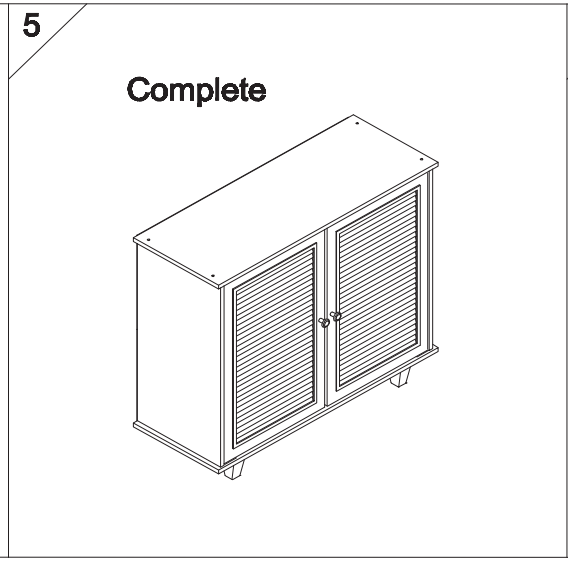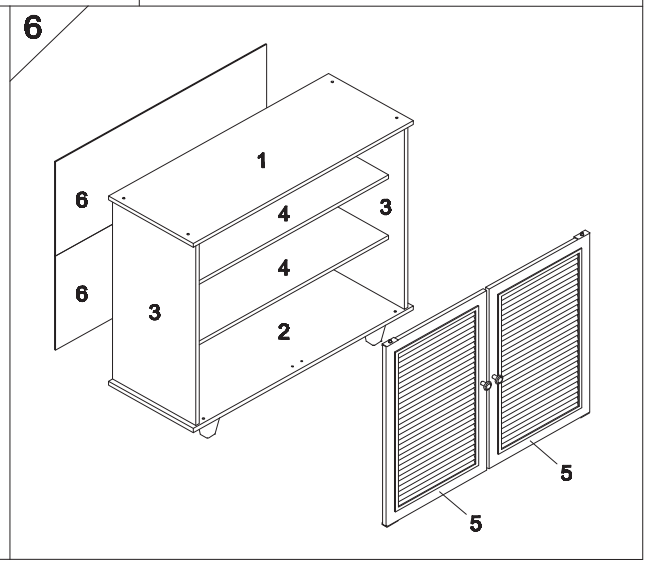
MODEL: HM2266